Requirements Analysis and Specification

S.S. Satapathy
Dept. of CSE
TU

Requirements Analysis and Specification

- The aim of this phase is to thoroughly understand the customer requirements and prepare a SRS (Software Requirement specification) document
- The activities are carried out by System Analyst

Requirements Analysis and Specification contd…

- Questions on project the system analyst tries to understand:
  - What is the problem?
  - Why is it important to solve the problem?
  - What are the possible solutions to the problem?
  - What exactly are the data input to the system and what exactly are the data output by the system?
  - What are the possible complexities that might arise while solving the problem?
  - If there are external software or hardware with which the developed software has to interface, then what exactly would the data interchange formats with the external system be?

Requirements Analysis and Specification contd…

- The system analyst
  - has to understand the exact customer requirements
  - identifies and resolves the various requirements problems.
  - identify and eliminate anomalies/inconsistencies and incompleteness
    - resolves inconsistencies, anomalies or incompleteness by carrying out further discussions with the end-users and the customers
- Finally prepares the SRS (system requirement specifications) document

Requirements Analysis and Specification contd…

- Anomalies/ambiguities (No clear interpretation)
  - Examples:
    - Temperature: hot/cold; high/medium/low.
    - Good carrier of an applicant
- Inconsistency/contradiction
  - requirement suggested by one user contradicts with that suggested by another
  - Example:
    - User1: if CGPA<5.0 then send report card to parents
    - User2: if CGPA<5.0 then student is in Academic probation; allow him/her less credit in next semester
- Incompleteness: Some requirements are overlooked
  - Example:
    - if CGPA<5.0 then send report card to parents; but there is no parent address in student database
    - If temperature is >200 degree raise the alarm; but no information when to stop alarm

SRS Document

- Who are going to use the SRS document
  - Users, customers and market personnel
  - Software developers
  - Test Engineers
  - User documentation writers
  - Project managers
  - Maintenance engineers

Characteristics of a Good SRS Document

- Concise, unambiguous, consistent and complete
- Structured
  - Should facilitate systematic evolution over time
- Black-box view
  - Should specify what the system do, not how to do(how to do is design issue)
- Traceable
  - Possible to trace requirement to design elements that implement is and vice versa
- Response to undesired events
  - Specify response of the system to exceptions
- Verifiability
  - All the requirements should be verifiable

Characteristics of a Bad SRS Document

- Over specification
  - Requirements specifications should bs as simple as possible leaving further elaborations on designing
  - Ex: How to display result in an exam: in what order the list to be sorted etc..
- Forward reference
  - Reference to some specifications those are described Should facilitate systematic evolution over time
  - Ex: Describe first best allrounder as the student with highest CGPA and awards in sports and then describe how to calculate CGPA
- Wishful thinking
  - Describe something which is difficult to implement
- Noise
  - Describe something not directly relevant to s/w development

SRS document

- Important parts of SRS document are:
  - 1.Functional requirements of the system
  - 2.Non-functional requirements of the system
  - 3.Goals of implementation

SRS document

- Functional requirements :
  - Each function f_i of the system can be considered as a transformation of a set of input data (ii) to the corresponding set of output data (o_i). The user can get some meaningful piece of work done using a high-level function

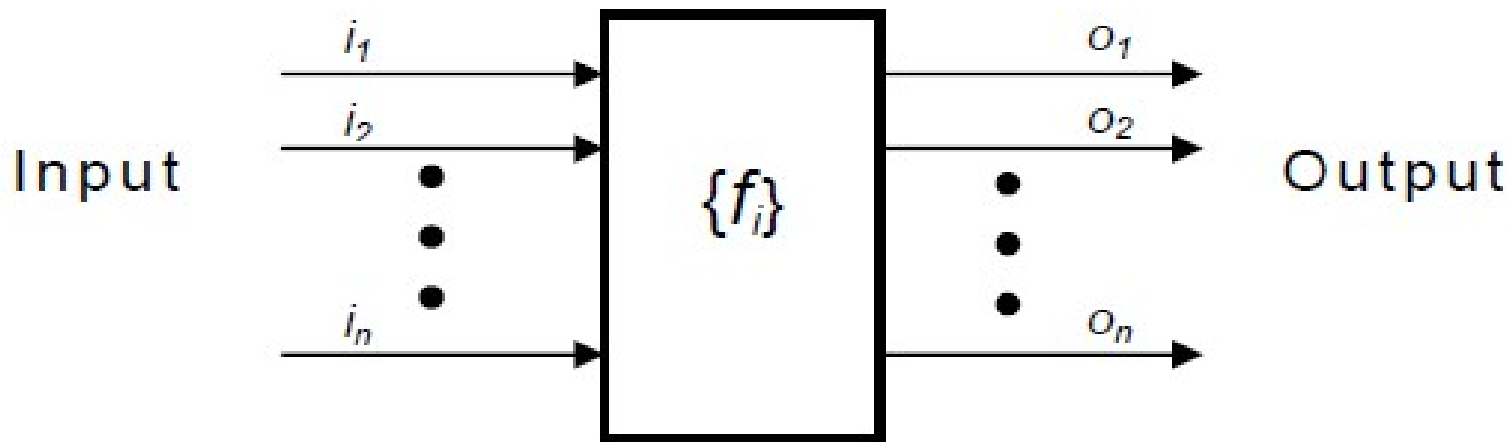

View of a system performing a set of functions

SRS document

- Non-functional requirements :
  - characteristics of the system which can not be expressed as functions
    - maintainability of the system
    - portability of the system
    - usability of the system, etc.
  - may include:
    - reliability issues
    - accuracy of results
    - human - computer interface issues
    - constraints on the system implementation, etc

Non-Functional Requirement

- Examples:
  - Database: DBMS available free of cost in public domain should be used for storing data
  - Operating System: Software should be developed for both Windows and Linux system
  - User interface should be available in web browsers

SRS document

- Goals of implementation:
  - The goals of implementation part documents some general suggestions regarding development
    - such as revisions to the system functionalities that may be required in the future
    - new devices to be supported in the future, reusability issues, etc.
  - These are the items which the developers might keep in their mind during development so that the developed system may meet some aspects that are not required immediately

Functional requirements

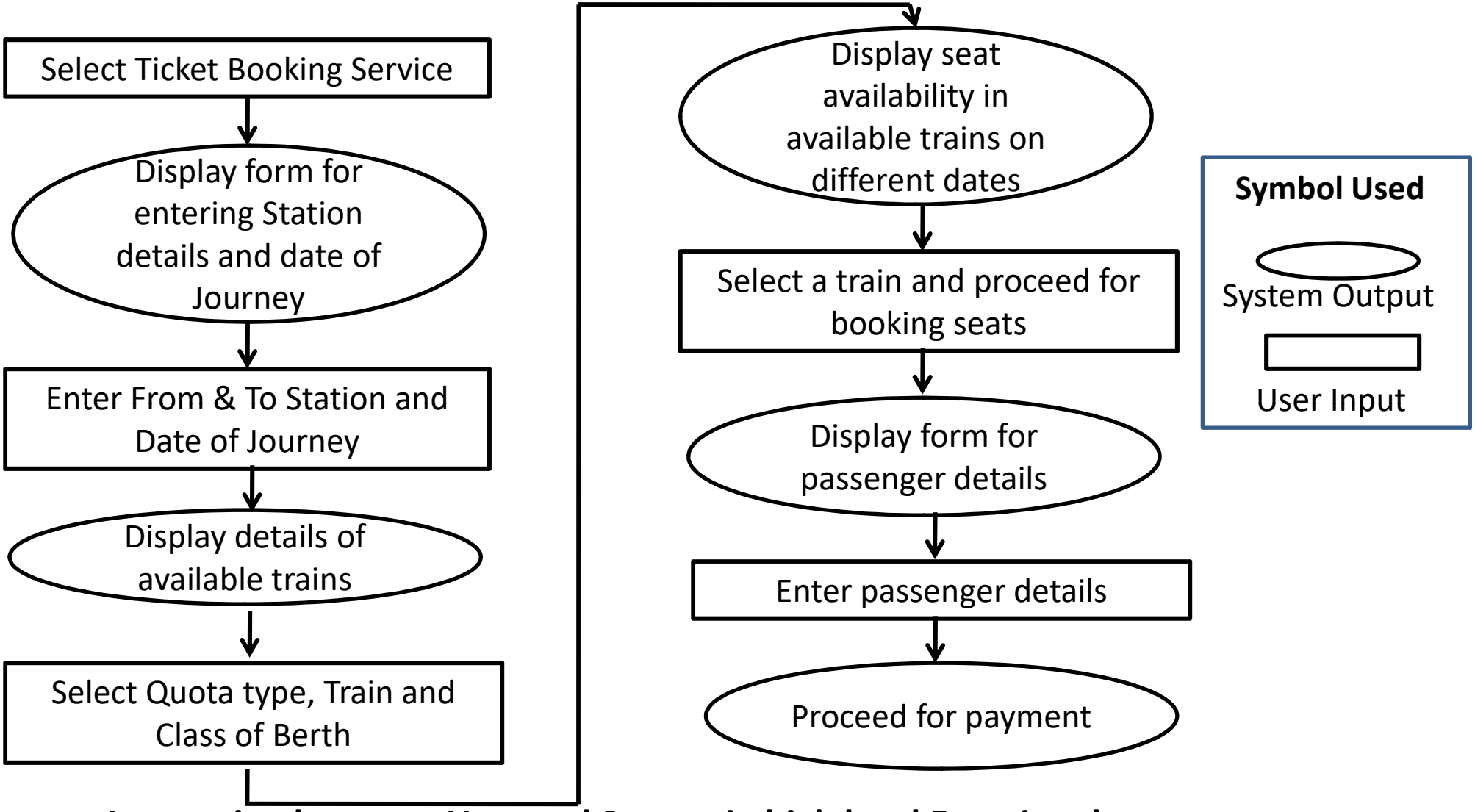

Interaction between User and System in high level Functional requirements

How to Document Functional requirements

- Documenting functional requirement:
  - Once functional requirements are identified, they can be documented describing i. input, ii. output and iii. type of processing required on the input. For example:
  - **R1. Booking a ticket in IRCTC web-portal**
  - **R1. Description:**

    Ticket booking function first search available trains from source station to destination train on a specified date. It checks seat availability on the users choice & book ticket.

    - **R1.1. Select booking ticket option**
      - **Input:** User selects booking ticket option
      - **Output:** User is provided with a form for entering journey details such as from and to station, date of journey
    - **R1.2. Provide journey details**
      - **Input:** From station name, To station name and date of journey
      - **Output:** List of trains available between the stations on the given date
    - **R1.3. Select train and seat class**
      - **Input:** Select category, train and seat class
      - **Output:** Display Ticket Status(WL/RAC/No of seats available)
    - **R1.4. Proceed for Booking**
      - **Input:** Select the train on a date
      - **Output:** Display form for providing passenger details
    - **R1.5. Provide passenger details**
      - **Input:** provide passengers details such as name, gender, age etc…
      - **Output:** Proceed for payment

Representation of complex requirement logic

- SRS document should properly present all conditions under which different scenario of interaction occurs
- Often conditions can be complex and several alternative interaction and processing sequence may exists depending un the input condition in previous step
- These complex scenario can be easily represented by either **i. Decision tree** or **2. Decision table**

Decision Tree

- Presents a graphical view of processing logic involved in business logic and corresponding action taken
- The **edges of a decision tree** represent **conditions** and the **leaf nodes** represent the **actions** to be performed depending on the outcome of testing the condition
- Example: Library Membership Automation Software (LMS) with the three options
  - New membership
  - Membership Renewal
  - Membership cancellation

Decision tree representation of LMS

- **New membership option**
  - **Decision:** When the 'new member' option is selected, the software asks details about the member like the member's name, address, phone number etc.
  - **Action:** If proper information is entered then a membership record for the member is created and a bill is printed for the annual membership charge plus the security deposit payable.
- **Membership Renewal option**
  - **Decision:** If the 'renewal' option is chosen, the LMS asks for the member's name and his membership number to check whether he is a valid member or not.
  - **Action:** If the membership is valid then membership expiry date is updated and the annual membership bill is printed, otherwise an error message is displayed.
- **Membership cancellation option**
  - **Decision:** If the 'cancel membership' option is selected, then the software asks for member's name and his membership number.
  - **Action:** The membership is cancelled, a cheque for the balance amount due to the member is printed and finally the membership record is deleted from the database.

Decision tree representation of LMS

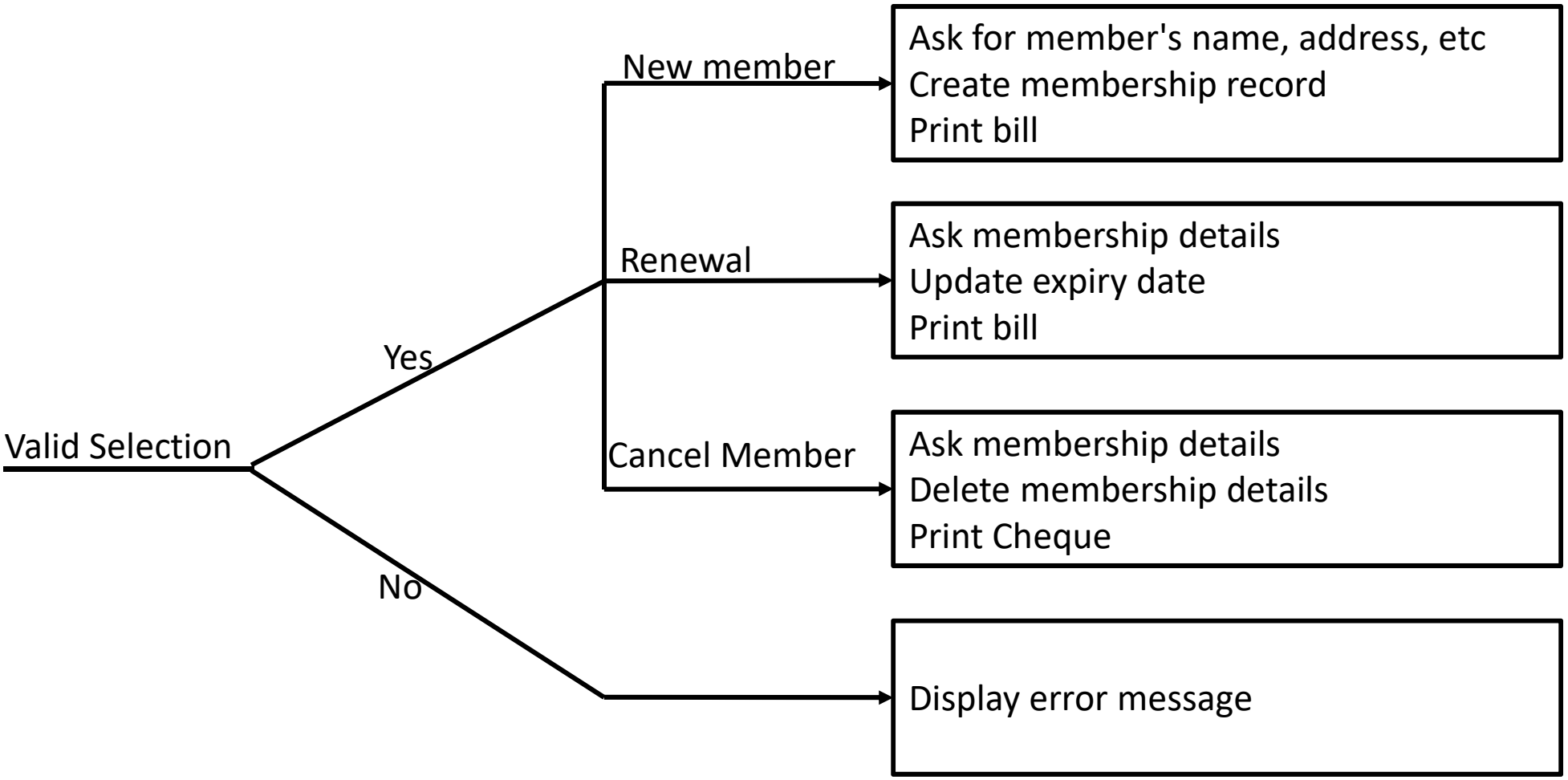

Decision Table representation of LMS

Conditions				
Valid Selection	NO	YES	YES	YES
New membership	-	YES	NO	NO
Membership Renewal	-	NO	YES	NO
Membership cancellation	-	NO	NO	YES
Actions				
Display error message	X			
Ask for member's name, address, etc		X		
Create membership record		X		
Print bill		X	X	
Ask membership details			X	X
Update expiry date			X	
Print cheque				X
Delete Record				X

Decision Tree vs. Decision Table

- Readability: Decision tree are easier to read and understand when no. of conditions are small. All possible combination of conditions are considered in Decision tree
- Representation of order of decision making: when a multilevel decision making is required, tree is the better option
- Complex decision logic: A table can be better option when logic is complex